Ductile Iron Butterfly Valve Grooved Supervised Closed 300PSI

Technical Features

- Connections: Grooved Ends (AWWA C606) / Wafer Ends (ANSI Class 125)
- Sizes: 2-1/2”, 3”, 4”, 6”, 8”
- Approvals: UL, ULC, FM, and California State Fire Marshal
- Working Pressure: Grooved & Wafer 300PSI (Max. Test Pressure: 600PSI)
- Maximum Working Temperature: 250ºF (120ºC)
- Application: Indoor and Outdoor Use
- Double-Seal Disc; Resilient EPDM Coating
- Indicator: Colored in White
- Factory-Installed Supervisory Tamper Switch Assembly
- Also Available with Normally Open Switches

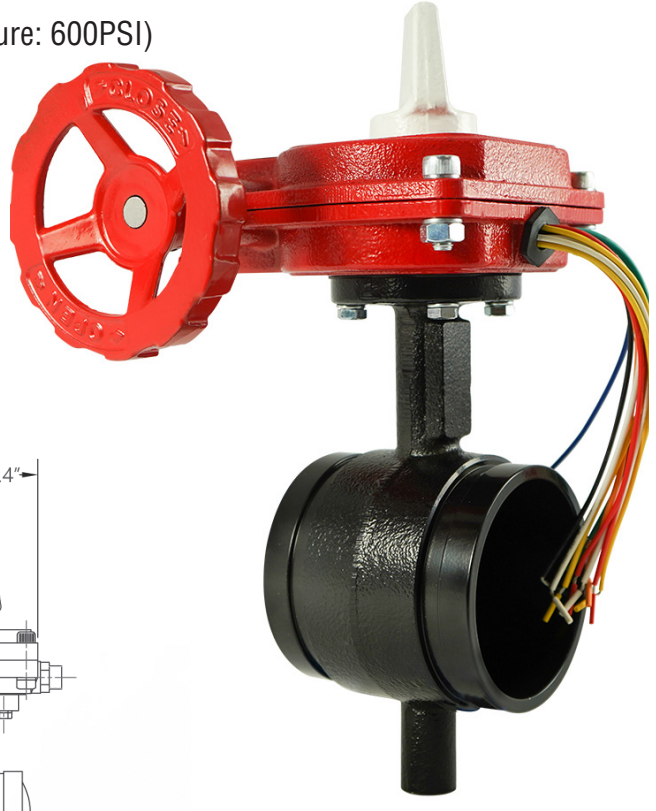

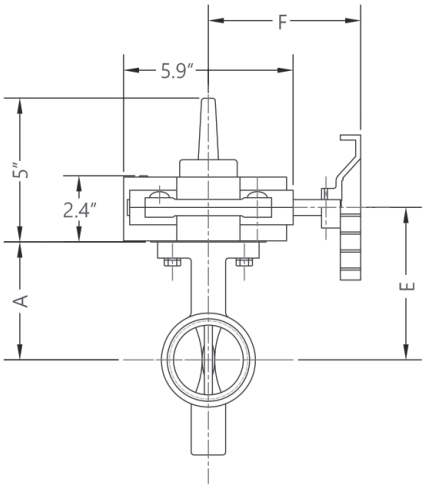

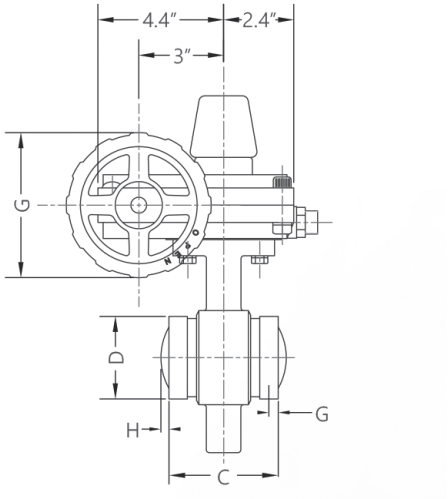

ITEM #	SIZE	A	C	D	E	F	G	H	WEIGHT
6520252-NC	4"	5.7"	4.5"	4.5"	6.9"	5.3"	5.0"	-	26 LBS
6520253-NC	6"	7.0"	5.2"	6.6"	8.2"	7.6"	8.7"	0.3"	39 LBS
6520254-NC	8"	8.0"	5.8"	8.6"	9.2"	7.6"	8.7"	1.0"	51. LBS

System No.		Location		Spec Section		Paragraph	
Submitted By		Date		Approved		Date	

Ductile Iron Butterfly Valve Grooved Supervised Closed 300PSI

WIRING DIAGRAM

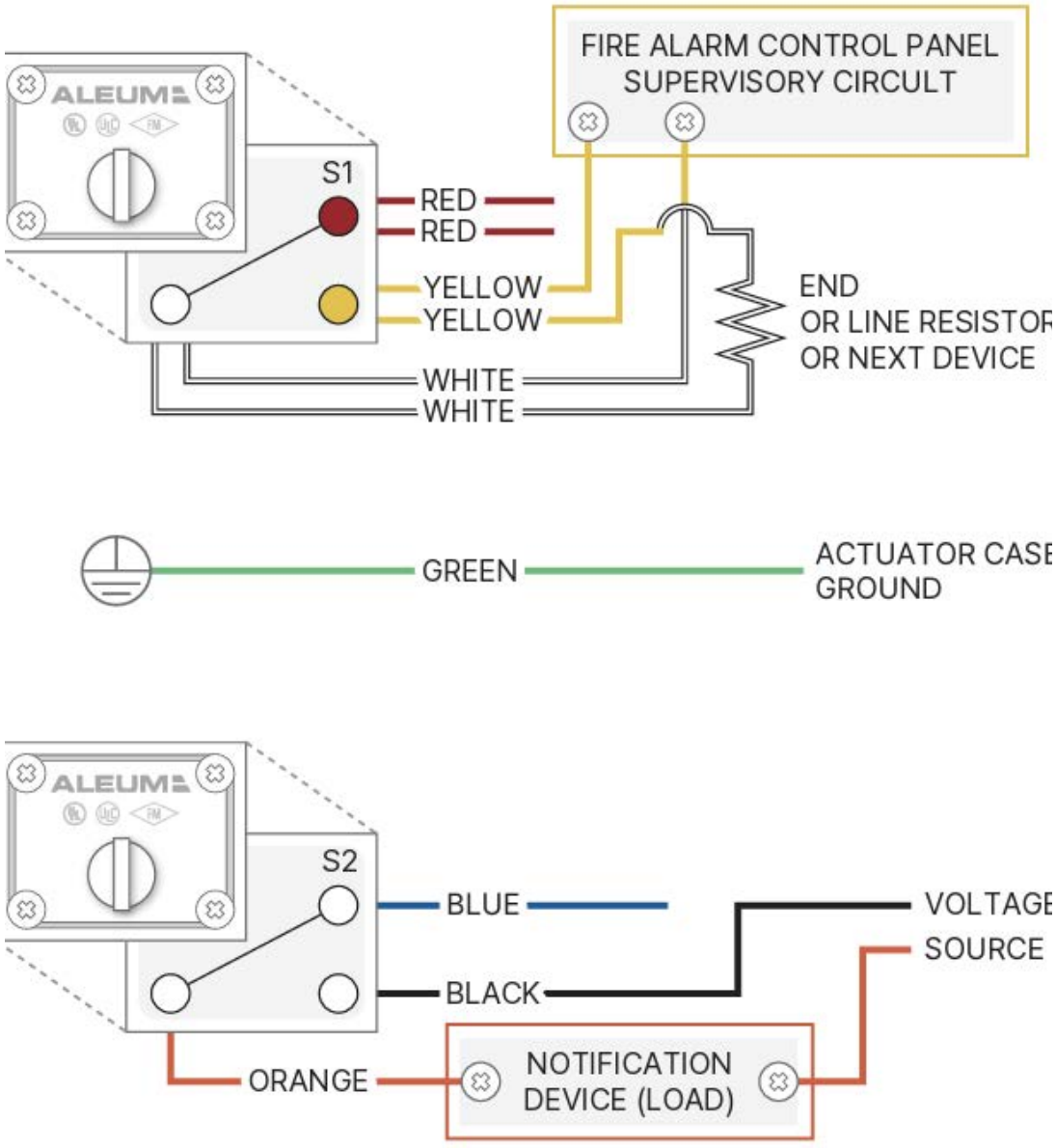

System No.		Location		Spec Section		Paragraph	
Submitted By		Date		Approved		Date	