GROOVED BUTTERFLY VALVE WITH TAMPER SWITCH



- Design Standard: API609
- Connection Ends: Groove to AWWA C606
- Top Flange Standard: ISO 5211
  Stem drive by keys, parallel or diagonal square of flat head
- Working Pressure: 300PSI
- Temperature Range: 32° to 176° F
- Coating:
  Fusion Bonded Epoxy Coating in accordance with ANSI/AWWA

c UL us LISTED

FM c us APPROVED

WIRING DIAGRAM:

SUPERVISORY SWITCH

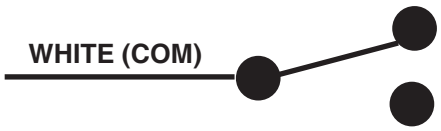

AUXILIARY SWITCH

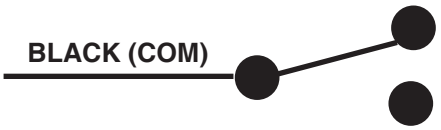

ACTUATOR CASE GROUND



System No.		Location		Spec Section		Paragraph	
Submitted By		Date		Approved		Date	

GROOVED BUTTERFLY VALVE WITH TAMPER SWITCH

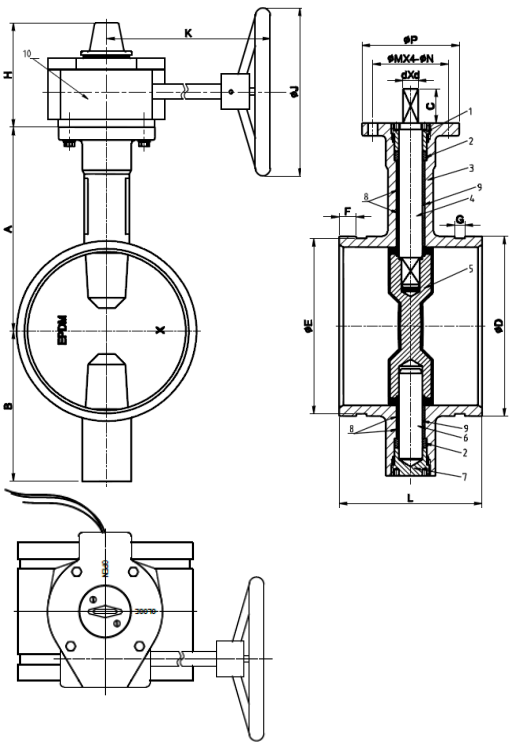

SPECIFICATIONS: MATERIAL

1. **Upper Shaft Sealing Nut**
2. **Shaft (Stem) Seal:** EPDM
3. **Body:** Ductile Iron conforming to ASTM A-536, Grade 65-45-12
4. **Upper Shaft (Stem):** 416 stainless steel conforming to ASTM A-582
5. **Disc:** Ductile Iron conforming to ASTM A-536, Grade 65-45-12, with EPDM Coating
6. **Lower Shaft (Stem):** 416 stainless steel conforming to ASTM A-582
7. **Lower Shaft (Stem) Sealing Nut:** WCB conforming to ASTM A-216
8. **Stem Bushing:** PTFE conforming to ASTM A-4894
9. **O-Ring (Seat):** Grade "E" EPDM conforming to ASTM D-2000
10. **Gear Box:**

c UL us LISTED

FM APPROVED

Item #	Size	A	B	C	D	E	F	G	H	J	P	M	N	D	L
6520250	2-1/2"	4.92	3.74	1.26	2.87 3	2.72 2.85	0.63	0.31	4.37	5.98	3.54	2.76	0.35	0.39	3.8
6520251	3"	5.51	3.94	1.26	3.5	3.34	0.63	0.31	4.37	5.98	3.54	2.76	0.35	0.39	3.82
6520252	4"	6.3	3.94	1.26	4.5	4.33	0.63	0.31	4.37	5.98	3.54	2.76	0.35	0.43	4.53
6520253	6"	7.48	5.51	1.26	6.5 6.63	6.33 6.46	0.63	0.37	4.37	7.87	3.54	2.76	0.35	0.63	5.21
6520254	8"	9.06	6.89	1.26	8.52 8.63	8.33 8.46	0.75	0.44	4.96	11.4	4.92	4.02	0.47	0.75	5.8
6520255	10"	10.2	7.87	1.77	10.53 10.75	10.56 12.32	0.75	0.5	4.96	11.4	4.92	4.02	0.47	0.87	6.26

System No.		Location		Spec Section		Paragraph	
Submitted By		Date		Approved		Date	