COMMERCIAL RISER ASSEMBLY

Argco's Model CR Commercial Riser comes factory assembled with the necessary accessories for a cost effective, yet complete riser assembly.

c UL us LISTED

2”(50mm), 2-1/2”(65mm), & 3”(80mm),
4”(100mm), 6”(150mm), 8"(200) Grooved
300 psi (20.7 bar) Working Pressure



Features:

1. Painted cast ductile iron or welded steel body construction for grooved manifolds.
2. Brass and galvanized Trim.
3. Factory assembled and pressure tested.
4. Available with Test and Drain Valves in various orifice sizes.
5. Same end-to-end dimensions for the 2”(50mm) through 6”(150mm) grooved sizes.
6. Approved for installation in horizontal or vertical positions.
7. Built in drain port allows hydrostatic testing without draining the system.
8. ¼” three-way valve allows for easy testing and replacing of pressure gauge.
9. Dedicated cULus Listed, ULC Listed and FM Approved Waterflow Detector assures optimun



ARGCO'S Commercial Riser Manifold Assembly includes a cULus Listed pressure gauge, a ¼” three-way valve, and a dedicated waterflow detector containing two sets of SPDT contacts, having an electrical rating of 10A @ 125/250 VAC/2.5 A @ 24 VDC.

Test & Drain Trim with 5.6K Factor
1" Test & Drain for 2" Size
1-1/4" Test & Drain for 2-1/2" and 3" Size
2" Test & Drain for 4" Thru 8" Size
Pressure Relief Trim with Test & Drain Valve with 175 psi pressure rating

Assembled in Fort Smith, Arkansas

TAA COMPLIANT

POTTER The Symbol of Protection

With Potter Flow Switch:

	Test & Drain	T&D w/Pressure Relief
SIZE	ITEM #	ITEM #
2"	6520356-0200	6520358-0200
2-1/2"	6520356-0250	6520358-0250
3"	6520356-0300	6520358-0300
4"	6520356-0400	6520358-0400
6”	6520356-0600	6520358-0600
8”	6520356-0800	6520358-0800

Pressure Relief Trim Kit Only

1” thru 2”
2-1/2” thru 3”
4” thru 8”



System No.		Location	
Submitted By		Date	

Spec Section		Paragraph	
Approved		Date	

ARGCO ARGCO.com 800-854-1015

Installation
Model CR Commercial Riser Manifolds

May be installed either horizontally (flow switch on top) or vertically (flow going up). The inlet of the Riser Manifold may be connected directly to a shut-off control valve.

Notes:
Where applicable, pipe thread sealant is to be applied sparingly. Use of a non-hardening pipe thread sealant is recommended. Never remove any piping component, nor correct or modify any piping deficiencies, without first depressurizing and draining the system.
Provisions for an alarm test flow on Residential Models must be made.
The alarm test flow is to be through an orifice having a flow capacity equal to, or smaller than, the smallest orifice sprinkler in the system. One of two options can be considered. The first option is to temporarily install a test orifice in the outlet of the drain line prior to performing the alarm test. The second option is to install an Inspector's Test Connection downstream of the Waterflow Alarm Switch.

Step 1. Install the manifold body with the flow arrow pointing in the downstream position using threaded connections and/or listed mechanical grooved connections, as applicable.

Step 2. Connect the drain line and on commercial manifolds set the ball valve, or optional **Test & Drain Valve;** to the OFF position or on residential manifolds close the drain valve.

Step 3. Refer to the Flow Switch Instructions for wiring guidance. All wiring must be performed in accordance with the authority having jurisdiction and/or the National Electrical Code.

Step 4. Refer to additional instructions for for Optional Pressure Relief Trim installation.

Step 5. Place the system in service by filling the system with water. When filling the system, partially open the control valve to slowly fill the system. Filling the system slowly will help avoid damaging the waterflow alarm switch.
After the system is fully pressurized, completely open the control valve.

Step 6. Secure all supply valves open.

Commercial Riser with Test & Drain Trim

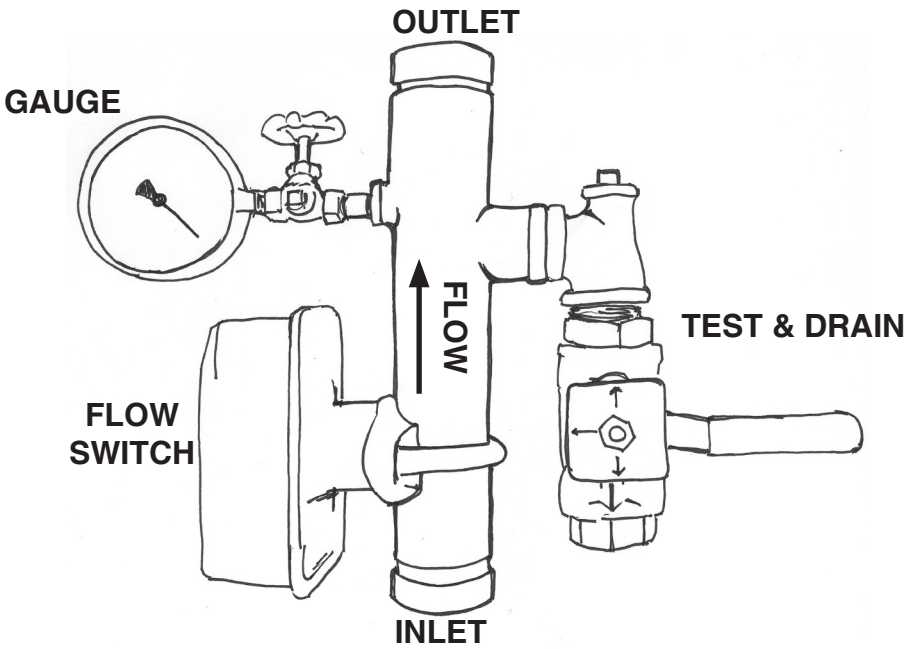

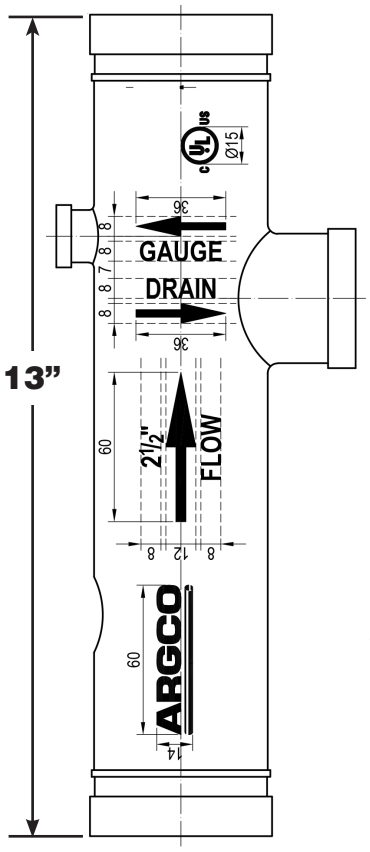

 © ARGCO

Installation
Model CR Commercial Riser Manifolds with Pressure Relief Trim

May be installed either horizontally (flow switch on top) or vertically (flow going up). The inlet of the Riser Manifold may be connected directly to a control valve.

Notes:
Where applicable, pipe thread sealant is to be applied sparingly. Use of a non-hardening pipe thread sealant is recommended.
Never remove any piping component nor correct or modify any piping deficiencies, without first depressurizing and draining the system. The alarm test flow is to be through an orifice having a flow capacity equal to, or smaller than, the smallest orifice sprinkler in the system. One of two options can be considered. The first option is to temporarily install a test orifice in the outlet of the drain line prior to performing the alarm test. The second option is to install an Inspector's Test Connection downstream of the Waterflow Alarm Switch.

Step 1. Remove 1/2" pipe plug from manifold tee. Inspect exposed female tee threads, remove thread sealant remnants or debris as necessary.

Step 2. Install Pressure Relief Valve in manifold tee, orienting valve outlet port perpendicular to, and facing away from, manifold body.

Step 3. Install 1/2" Brass 90 x Barb in pressure relief valve outlet port.

Step 4. Disconnect drain piping from of manifold Test and Drain Valve, as applicable and install Reducing Tee on valve outlet, aligning tee threaded branch outlet parallel with pressure relief valve outlet port.
Reconnect drain piping to tee drain outlet as necessary.

Step 5. Install Flexible Hose by threading female ends onto 1/2" Brass 90 x Barb installed on relief valve outlet port and onto reducing tee branch outlet.

Note: Assure Flexible Hose is not susceptible to being caught or snagged by other moving parts.

Commercial Riser with Test & Drain and Pressure Relief Trim

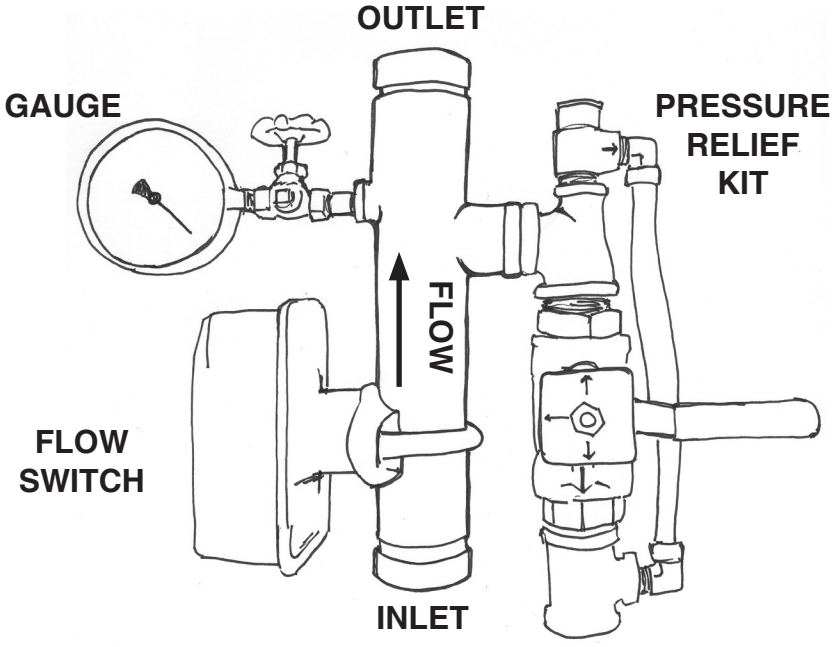

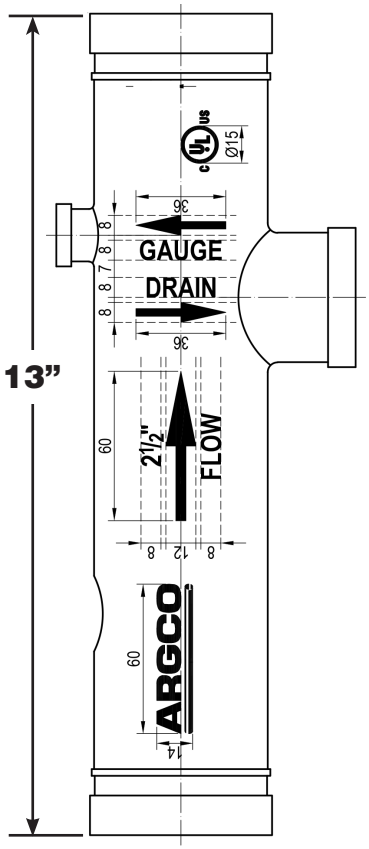

 © ARGCO

Model CR-TD
Commercial Riser Manifold with Test & Drain

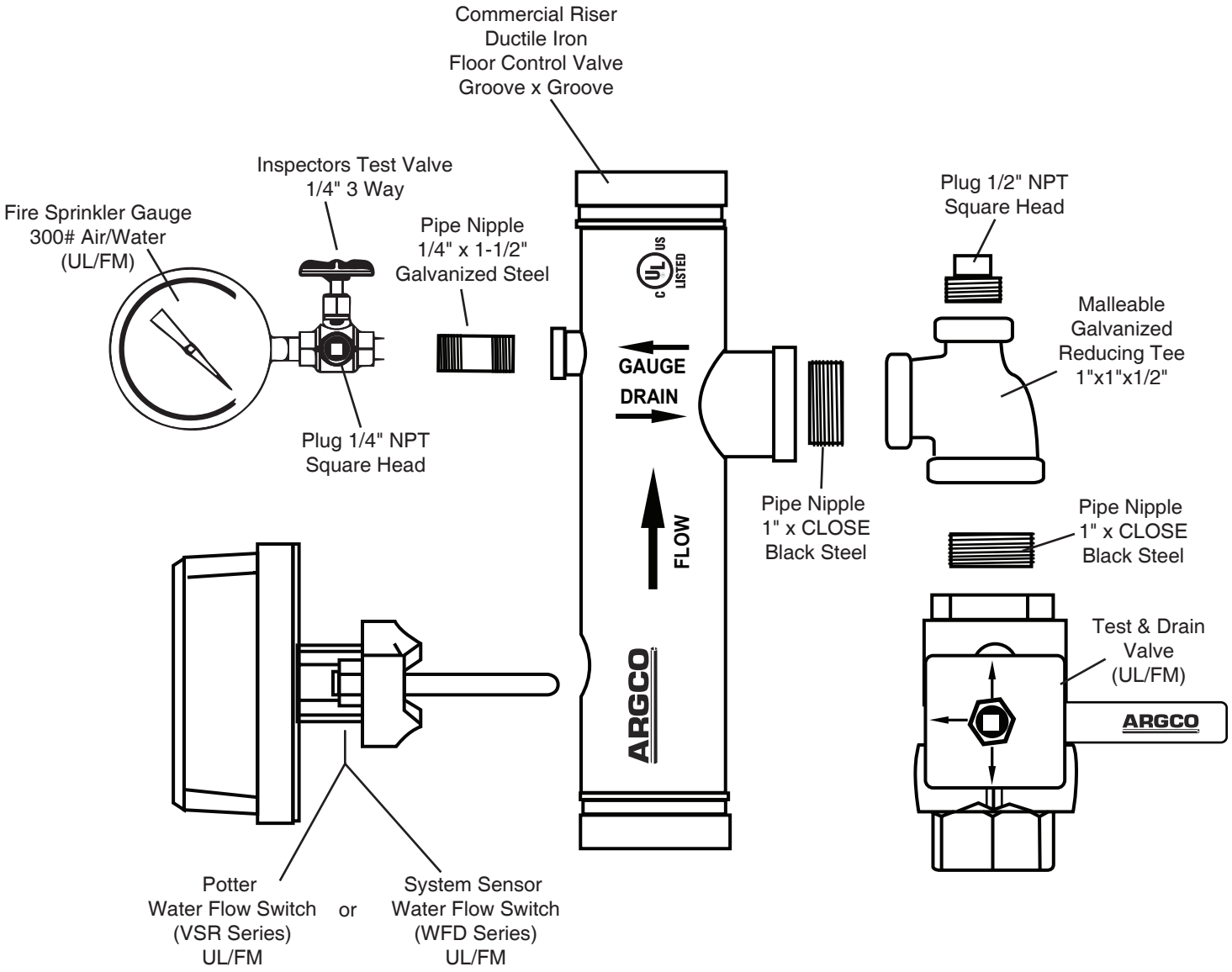

 © ARGCO

Model CR-PR
Commercial Riser Manifold with Test & Drain and Pressure Relief Kit

