GROOVED COUPLINGS - STANDARD FLEXIBLE

Model 104





Available Sizes
• 1" through 12" (25 through 300 mm)
Pipe Material
• Carbon steel, Schedule 10, Schedule 40.
For use with alternative materials and wall thicknesses please contact ARGCO.
Maximum Working Pressure
• Up to 300 psi.
Function
• Joins carbon steel pipe.
• Provides a rigid pipe joint designed to restrict axial or angular movement.
CERTIFICATIONS/LISTINGS
Underwriters Laboratories, Underwriters Laboratories Canada, Factory Mutual.

SPECIFICATIONS - MATERIAL

Housing Sections: Ductile Iron conforming to ASTM A536, Grade 65-45-12.

Housing Coating:
Standard: Orange
Available: Galvanized

Gasket:
Standard: Pre-Lubricated Grade E EPDM (Type A)
ARGCO's products are listed by Underwriters Laboratories UL Canada and Approved by Factory Mutual for we and dry (oil free air) sprinkler services within the rated working pressure.

Bolts and Nuts
Standard: Carbon Steel oval neck track bolts meeing ASTM A449 and ISO 898-1.
Carbon steel hex nuts meet ASTM A563 Grade B.
Nuts and Bolts are zinc electroplated per ASTM B633 NZ/FE5, finish Type III.
Available: Stainless Steel. Meets ASTM F593, Group 2 (316 stainless steel), condition CW.
Hex nuts meets ASTM F594, Group 2 (316 stainless steel), condition CW, with galling-resistant coating.

System No.		Location		Spec Section		Paragraph	
Submitted By		Date		Approved		Date	

GROOVED COUPLINGS - STANDARD FLEXIBLE

Model 104

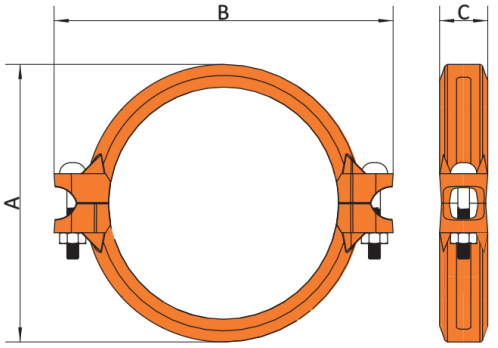

ARGCO Grooved Couplings are suitable for fire protection systems, water supply systems, and other process systems of higher working pressure.



						Angular Movement		Dimensions			
Item #	Nominal Size in/mm	Maximum Working Pressure psi	Maximum End Load lbs	Axial Displacement in/mm	per coupling degrees	per pipe in/ft, mm/m	A inches mm	B inches mm	C inches mm	Bolt inches mm
7010015	1"	300	405	0.0625	5° - 30'	0.71	2.17	3.82	1.77	3/8" x1-1/2"
	25			1.6		58	55	97	45	M10x40
7010016	1-1/4"	300	656	0.0625	4° - 20'	0.58	2.50	4.23	1.77	3/8" x1-3/4"
	32			1.6		48	63.5	107.5	45	M10x45
7010017	1-1/2"	300	852	0.0625	3° - 48'	0.45	2.72	4.49	1.77	3/8" x1-3/4"
	40			1.6		38	69	114	45	M10x45
7010018	2"	300	1327	0.0625	3° - 01'	0.4	3.29	4.88	1.81	3/8" x 2-1/8"
	50			1.6		33	83.6	124	46	M10x55
7010019	2-1/2"	300	1945	0.0625	2° - 30'	0.31	3.86	5.39	1.81	3/8" x 2-1/8"
	65			1.6		26	98	137	46	M10x55
7010020	3"	300	2885	0.0625	2° - 04'	0.21	4.49	6.14	1.81	3/8" x 2-1/8"
	80			1.6		18	114	156	46	M10x55
7010021	4"	300	4258	0.125	3° - 14'	0.34	5.43	7.32	1.97	1/2" x 2-5/8"
	100			3.2		28	138	186	50	M12x65
7010022	5"	300	6457	0.125	2° - 53'	0.27	6.46	8.39	1.97	1/2" x 2-5/8"
	125			3.2		23	164	213	50	M12x65
7010023	6"	300	9229	0.125	2° - 18'	0.23	7.56	9.61	1.97	1/2" x 2-5/8"
	150			3.2		19	192	244	50	M12x65
7010024	8"	300	17079	0.125	1° - 40'	0.18	10.00	13.39	2.44	3/4" x 3-1/2"
	200			3.2		15	254	340	62	M20x90
7010025	10"	300	26101	0.125	1° - 20'	0.14	12.32	15.75	2.52	3/4" x3-1/2"
	250			3.2		12	313	400	64	M20x90
7010026	12"	300	37031	0.125	1° - 08'	0.12	14.49	18.27	2.52	7/8" x4-1/3"
	300			3.2		10	368	464	64	M22x110

Note: Allowable Axial Displacement figures are for roll grooved standard steel pipe. Values for cut grooved pipe will be double that of roll grooved. These values are maximums; for design and installation purposes these figures should be reduced by: 50% for ¾" – 3½"; 25% for 4" and larger to compensate for jobsite conditions.

- Working Pressure and End Load are total, from all internal and external loads, based on standard weight (ANSI) steel pipe, standard roll or cut grooved in accordance with ARGCO specifications.
- When assembling ARGCO couplings onto end caps, take additional care to make certain the end cap is fully seated against the gasket end stop.

The NFPA 13 defines a flexible coupling as;

"a listed coupling or fitting that allows axial displacement, rotation, and at least 1 degree of angular movement of the pipe without inducing harm on the pipe. For pipe diameters of 8 in. and larger, the angular movement shall be permitted to be less than 1 degree but not less than 0.5 degrees." (NFPA 13- 2007 3.5.4)

For sprinkler systems, NFPA 13 specifies the use of flexible couplings to protect the system against damage from earthquakes and sets some specific examples of how and where they should be used. Designers and installers should design their fire protection systems in compliance with this standard.

System No.		Location		Spec Section		Paragraph	
Submitted By		Date		Approved		Date	

 © ARGCO

GROOVED COUPLINGS - STANDARD FLEXIBLE

Model 104

INSTALLATION INSTRUCTIONS:

Depressurize and drain the piping system before attempting to install, remove, or adjust any piping products.
Wear safety glasses, hardhat, and foot protection.

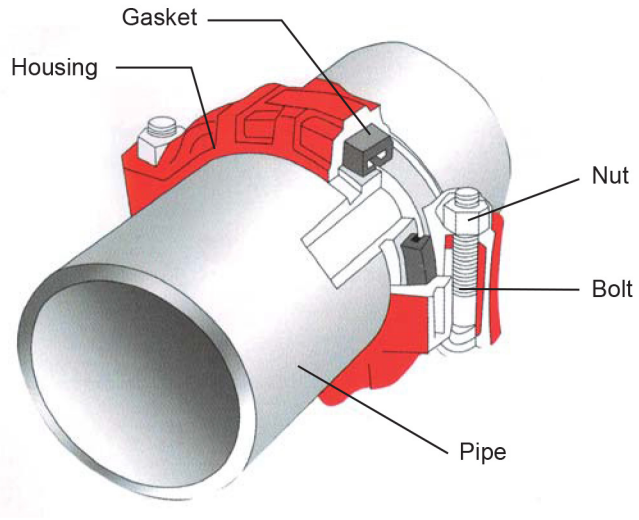

1. CHECK PIPE ENDS:
The outside surface of the pipe from the pipe end to the groove must be smooth and free from indentations, projections (including weld seams), and roll marks to ensure a leaktight seal for the gasket. All oil, grease, loose paint, and dirt must be removed.

2. CHECK GASKET AND LUBRICATE :
Check the gasket to make sure it is suitable for the intended service. Apply a thin coat of Tuf-Lube Gasket Grease Lubricant to the gasket lips and exterior.

3. POSITION GASKET:
Position the gasket over the pipe end. Make sure the gasket does not overhang the pipe end.

4. JOIN PIPE ENDS:
Align and bring the two pipe ends together. Slide the gasket into position, and make sure it is centered between the grooves in each pipe.
Make sure no portion of the gasket extends into the groove in either pipe.

5. ASSEMBLE HOUSINGS:
Insert one bolt into the housings, and thread the nut loosely onto the bolt (nut should be flush with end of bolt) .

6. INSTALL HOUSINGS:
Install the housings over the gasket. Make sure the housings' keys engage the grooves properly on both pipes.

Torque Value
When a torque value is specified for coupling installation, this torque MUST be applied to the nuts in order to achieve proper installation. However, torque beyond specified values will not improve sealing.
Exceeding the specified torque by more than 25% may cause damage to the product, resulting in pipe-joint failure.

SPECIFIED TORQUE (LB/FT.)

SIZE	MIN	MAX
1”	30	45
1-1/4”	30	45
1-1/2”	30	45
2”	80	100
2-1/2”	80	100
3”	80	100
3-1/2”	100	130
4”	100	130

Using Impact Wrenches

When using an impact wrench, the speed of assembly may require extra care to ensure nuts are tightened evenly by alternating sides until proper assembly is complete.
Impact wrenches do not provide the installer with direct “wrench feel” or torque to judge nut tightness. Since some impact wrenches are capable of high output, it is important to develop a familiarity with the impact wrench to avoid damaging or fracturing bolts or coupling bolt pads during installation.
DO NOT continue to use an impact wrench after the visual installation guidelines for the coupling are achieved.
Perform trial assemblies with the impact wrench and socket or torque wrenches to help determine the capability of the impact wrench. Using the same method, periodically check additional nuts throughout the system installation.
In addition, verify that proper impact grade sockets are being used for coupling installation.

 © ARGCO