MECHANICAL TEE (GROOVE)
Model 402



The Model 402 Mechanical Tee provides a fast and easy mid-pipe grooved branch outlet. The mechanical tee utilizes ductile iron housings, a grade E gasket and heat-treated carbon steel track bolts and nuts. Maximum working pressure: 300 psi (20 bar).

Pipe Material
- Carbon steel, Schedule 10, Schedule 40.
  For use with alternative materials and wall thicknesses please contact ARGCO.

Maximum Working Pressure
- Up to 300 psi/20 bar

Function
- Joins carbon steel pipe.
- Provides a rigid pipe joint designed to restrict axial or angular movement.

CERTIFICATIONS/LISTINGS
Underwriters Laboratories, Underwriters Laboratories Canada, Factory Mutual.

SPECIFICATIONS - MATERIAL
Housing Sections: Ductile Iron conforming to ASTM A 536, Grade 65-45-12.

Housing Coating:
Standard: Orange Enamel
Available: Hot Dipped Galvanized

Gasket:
Standard: Grade E EPDM (Type A)
ARGCO's products are listed by Underwriters Laboratories UL Canada and Approved by Factory Mutual for wet and dry (oil free air) sprinkler services within the rated working pressure.

Bolts and Nuts
Standard: Carbon Steel oval neck track bolts meeing ASTM A449 and ISO 898-1. Carbon steel hex nuts meet ASTM A563 Grade B.
Nuts and Bolts are zinc electroplated per ASTM B633 NZ/FE5, finish Type III.
Available: Stainless Steel. Meets ASTM F593, Group 2 (316 stainless steel), condition CW.
Hex nuts meets ASTM F594, Group 2 (316 stainless steel), condition CW, with galling-resistant coating.

System No.		Location		Spec Section		Paragraph	
Submitted By		Date		Approved		Date	

MECHANICAL TEE (GROOVE)
Model 402

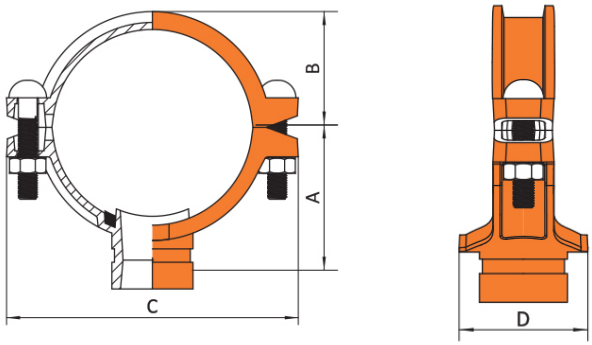

Item #	Nominal Size in/mm	Pipe O.D.	Hole Dia. ∓ +3.2,-0 /+0.13,-0	Dimensions - in/mm				Bolt Size in/mm
				A	B	C	D	
7010415	2 x 1-1/4	2.375 x 1.669	1.75	2.85	1.65	4.72	3.31	3/8 x 2-3/8
	50 x 32	60.3 x 42.4	44.5	72.5	42	120	84	M 10 x 60
7010416	2 x 1-1/2	2.375 x 1.9	1.75	2.85	1.65	4.72	3.31	3/8 x 2-3/8
	50 x 40	60.3 x 42.4	44.5	72.5	42	120	84	M 10 x 60
7010417	2-1/2 x 1-1/4	2.875 x 1.669	1.75	3.09	1.85	5.63	3.31	1/2 x 2-5/8
	65 x 32	73 x 42.4	44.5	78.5	47	143	84	M 12 x 65
7010418	2-1/2 x 1-1/2	2.875 x 1.9	2.00	3.09	1.85	5.63	3.54	1/2 x 2-5/8
	65 x 40	73 x 48.3	50.8	78.5	47	143	90	M 12 x 65
7010420	3 x 1-1/4	3.5 x 1.669	1.72	3.39	2.17	6.22	3.31	1/2 x 2-5/8
	80 x 32	88.9 x 42.4	44.5	86	55	158	84	M 12 x 65
7010421	3 x 1-1/2	3.5 x 1.9	2.00	3.39	2.17	6.22	3.54	1/2 x 2-5/8
	80 x 40	88.9 x 48.3	50.8	86	55	158	90	M 12 x 65
7010422	3 x 2	3.5 x 2.375	2.50	3.43	2.17	6.22	3.98	1/2 x 2-5/8
	80 x 50	88.9 x 60.3	63.5	87	55	158	101	M 12 x 65
7010424	4 x 1-1/4	4.5 x 1.669	1.75	3.90	2.56	7.13	3.31	1/2 x 2-3/4
	100 x 32	114.3 x 42.4	44.5	99	65	181	84	M 12 x 70
7010425	4 x 1-1/2	4.5 x 1.9	2.00	3.90	2.56	7.13	3.54	1/2 x 2-3/4
	100 x 40	114.3 x 48.3	50.8	99	65	181	90	M 12 x 70
7010426	4 x 2	4.5 x 2.375	2.52	3.64	2.44	6.77	3.54	1/2 x 2-5/8
	100 x 50	108 x 60.3	64	92.5	62	172	90	M 12 x 65
7010427	4 x 2-1/2	4.5 x 2.875	2.75	3.64	2.44	6.77	4.21	1/2 x 2-5/8
	100 x 65	114.3 x 73.0	70	92.5	62	172	107	M 12 x 65
7010428	4 x 3	4.5 x 3.5	3.50	3.90	2.56	7.13	5.35	1/2 x 2-3/4
	100 x 80	114.3 x 88.9	89	99	65	181	136	1/2 x 3
7010430	5 x 1-1/2	5.25 x 1.9	2.09	4.15	2.91	8.07	3.54	M 12 x 75
	125 x 40	133 x 48.3	53	105.5	74	205	90	M 12 x 70
7010435	6 x 1-1/4	6.625 x 1.669	1.75	4.92	3.7	9.76	3.31	9/16 x 3
	150 x 32	168.3 x 42.4	44.5	125	94	248	84	M 14 x 75
7010436	6 x 1-1/2	6.625 x 1.9	2.00	4.92	3.7	9.76	3.54	5/8 x 3-1/3
	150 x 40	168.3 x 48.3	50.8	125	94	248	90	M 16 x 85
7010437	6 x 2	6.625 x 2.375	2.52	4.65	3.58	9.71	3.94	9/16 x 3
	150 x 50	168.3 x 60.3	64	118	91	233	100	M 14 x 75
7010438	6 x 2-1/2	6.625 x 2.875	2.75	4.65	3.58	9.17	4.61	9/16 x 3
	150 x 65	168.3 x 63.5	70	118	91	233	117	M 14 x 75
7010439	6 x 3	6.625 x 3.5	3.62	4.65	3.58	9.17	5.08	9/16 x 3
	150 x 80	168.3 x 88.9	92	118	91	233	129	M 14 x 75
7010440	6 x 4	6.625 x 4.5	4.09	4.70	3.58	9.17	5.63	9/16 x 3
	150 x 100	168.3 x 114.3	104	119.5	91	233	143	M 14 x 75
7010443	8 x 2	8.625 x 2.375	2.50	5.98	1.92	12.68	3.98	5/8 x 3-1/2
	200 x 50	219.1 x 60.3	63.5	152	125	322	101	M 20 x 90
7010444	8 x 2-1/2	8.625 x 2.875	2.75	6.06	1.92	12.68	4.61	5/8 x 3-1/2
	200 x 65	219.1 x 63.5	70	154	125	322	117	M 20 x 90
7010445	8 x 3	8.625 x 3.5	3.50	6.06	1.92	12.68	5.35	5/8 x 3-1/2
	200 x 80	219.1 x 88.9	89	154	125	322	136	M 20 x 90

 © ARGCO