GROOVED STANDARD RADIUS TEES

Model 301



Available Sizes
• 2" through 12" (50 through 300 mm)

Pipe Material
• Carbon steel, Schedule 10, Schedule 40.
For use with alternative materials and wall thicknesses please contact ARGCO.

Maximum Working Pressure
• Up to 300 psi/20 bar

Function
• Joins carbon steel pipe.
• Provides a rigid pipe joint designed to restrict axial or angular movement.

CERTIFICATIONS/LISTINGS
Underwriters Laboratories, Underwriters Laboratories Canada, Factory Mutual.

SPECIFICATIONS - MATERIAL
Housing Sections: Ductile Iron conforming to ASTM A 536, Grade 65-45-12.

Housing Coating:
Standard: Orange Enamel
Available: Hot Dipped Galvanized

System No.		Location		Spec Section		Paragraph	
Submitted By		Date		Approved		Date	

GROOVED STANDARD RADIUS TEES
Model 301

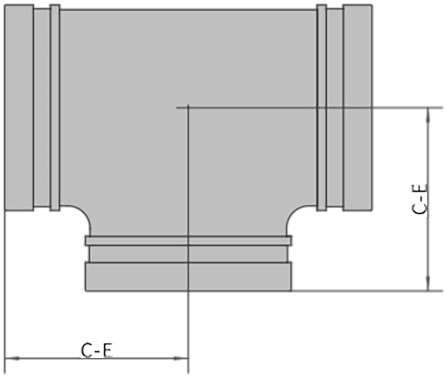

Item #	Nominal Size in/mm	Pipe O.D. in/mm	Max Working Pressure psi/Bar	C-E inches mm
7010092	1-1/4"	1.669	300	2.76
	32	42.4	20	70
7010093	1-1/2"	1.9	300	2.76
	40	48.3	20	70
7010094	2"	2.375	300	3.31
	50	60.3	20	84
7010095	2-1/2"	2.875	300	3.74
	65	73	20	95
7010096	3"	3.5	300	4.25
	80	88.9	20	108
7010097	4"	4.25	300	5.00
	100	108	20	127
7010098	5"	5.25	300	5.51
	125	133	20	140
7010099	6"	6.25	300	6.50
	150	159	20	165
7010100	8"	8.625	300	7.76
	200	219.1	20	197
7010101	10"	10.75	300	9.02
	250	273	20	229
7010102	12"	12.75	300	10.00
	300	323.9	20	254

• Working Pressure and End Load are total, from all internal and external loads, based on standard weight (ANSI) steel pipe, standard roll or cut grooved in accordance with ARGCO specifications.