OS&Y Gate Valve Grooved Ends

Model # ARG-MQR-FQXFQ-1 / /

Technical Features

- Connections: Grooved Ends (AWWA C606)
- Size: 2-1/2", 3", 4", 5", 6", 8", 10", 12"
- Approvals: UL, ULC, FM
- Maximum Working Pressure: 200PSI (Max. Test Pressure: 600PSI)
- Maximum Working Temperature: 180ºF (82ºC)
- Complies with AWWA C515
- NPT Plug on Body



File EX27391

Components	Material	Specification
Body	Ductile Iron	A536 65-45-12
Wedge	Ductile Iron, EPDM Encapsulated	
Wedge Nut	Stainless Steel	ANSI 304
Stem	Stainless Steel	ANSI 420
Bonnet	Ductile Iron	A536 65-45-12
Gasket	Rubber	EPDM
Packing	Graphite	Commercial
Gland	Ductile Iron	A536 65-45-12
Yoke Nut	Bronze	B62 C83600
Handwheel	Ductile Iron	A536 65-45-12
Handwheel Nut	Ductile Iron	A536 65-45-12
NPT Plug	Malleable Iron	Commercial
Gland Bolt	Stainless Steel	AISI 316
Bonnet Bolt	Carbon Steel	A307B

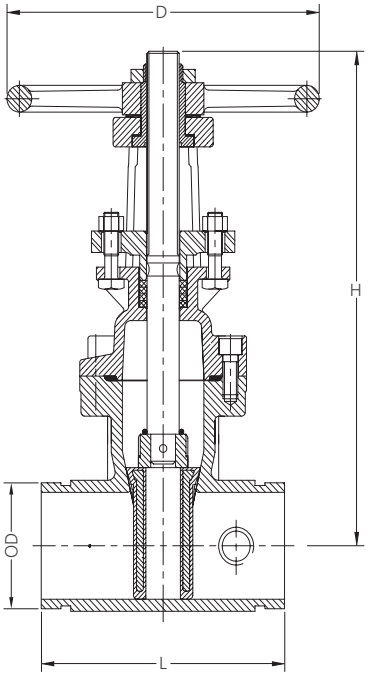

Dimensions

Size	OD		L		H (OPEN)		H (CLOSE)		D		Weight
	in	mm	in	mm	in	mm	in	mm	in	mm	lbs
2-1/2"	2.9	73.7	7.5	190.5	16.3	414.0	13.8	350.5	7.2	182.9	35.1
3"	3.5	88.9	8.0	203.2	18.9	480.0	15.7	398.8	10.0	254.0	42.6
4"	4.5	114.3	9.0	228.6	21.7	551.2	17.7	449.6	10.0	254.0	49.3
5"	5.6	142.2	10.0	254.0	25.8	655.3	20.9	530.9	12.0	304.8	88.1
6"	6.6	167.6	10.5	266.7	29.1	739.1	23.2	589.3	12.0	304.8	90.6
8"	8.6	218.4	11.5	292.1	36.6	929.6	28.7	729.0	14.0	355.6	142.7
10"	10.7	271.8	13.0	330.2	44.5	1130.3	34.6	878.9	17.5	444.5	229.9
12"	12.8	325.1	14.0	355.6	52.0	1320.8	40.2	1021.1	17.5	444.5	321.4

System No.		Location	
Submitted By		Date	

Spec Section		Paragraph	
Approved		Date	