FLANGE ADAPTER NIPPLE
Model 802



The Model 802 Flange Adapter Nipple allows for direct connection of a grooved system to ANSI class 12/150 flanged components

Pipe Material
- Carbon steel, Schedule 10, Schedule 40.
  For use with alternative materials and wall thicknesses please contact ARGCO.

Maximum Working Pressure
- Up to 300 psi/17 bar

Function
- Joins carbon grooved pipe system to flange components

CERTIFICATIONS/LISTINGS
Underwriters Laboratories, Underwriters Laboratories Canada, Factory Mutual.

SPECIFICATIONS - MATERIAL
Housing Sections: Ductile Iron conforming to ASTM A 536, Grade 65-45-12.

Housing Coating:
Standard: Orange Enamel

System No.		Location		Spec Section		Paragraph	
Submitted By		Date		Approved		Date	

FLANGE ADAPTER NIPPLE
Model 802

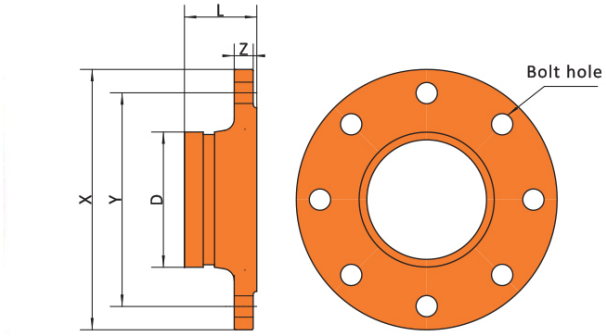

Item #	Nominal Size in/mm	Pipe O.D. in/mm	Max. Working Pressure PSI/Bar	Dimensions X inches mm	Y inches mm	Z inches mm	L inches mm	Bolt Holes No.	Bolt Size in/mm
7010630A	2	2.375	300	6.10	4.74	0.63	2.56	4	5/8
	50	60.3	20	155	120.5	16	65	4	M16
7010630	2-1/2	2.875	300	7.09	5.51	0.63	2.56	4	5/8
	65	73.0	20	180	140	16	65	4	M16
7010631	3	3.50	300	7.48	6.02	0.71	2.65	4	5/8
	80	88.90	20	190	153	18	65	4	M16
7010632	4	4.50	300	9.06	7.52	0.87	2.76	8	5/8
	100	114.30	20	230	191	22	70	8	M16
7010633	5	5.563	300	10.04	8.50	0.87	2.76	8	3/4
	125	141.3	20	255	216	22	70	8	M20
7010634	6	6.625	300	11.02	9.49	0.87	2.76	8	3/4
	150	168.30	20	280	241	22	70	8	M20
7010635	8	8.625	300	13.58	11.77	0.98	3.15	8	3/4
	200	219.1	20	345	299	25	80	8	M20
7010636	10	10.75	300	15.94	14.25	1.02	3.35	12	1
	250	273	20	405	362	26	85	12	M24
7010637	12	12.75	300	19.09	17.01	1.10	3.54	12	1
	300	323.9	20	485	432	28	90	12	M24

User Responsibility for Product Selection and Suitability
Each user bears final responsibility for making a determination as to the suitability of ARGCO products for a particular end-use application, in accordance with industry standards and project specifications, and the applicable building codes and related regulations as well as ARGCO performance, maintenance, safety, and warning instructions. Nothing in this or any other document, nor any verbal recommendation, advice, or opinion from any ARGCO employee, shall be deemed to alter, vary, supersede, or waive any provision of Allied Rubber and Gasket Company's standard conditions of sale, installation guide, or this disclaimer.
Note
All products to be installed in accordance with current ARGCO installation/assembly instructions. ARGCO reserves the right to change product specifications, designs and standard equipment without notice and without incurring obligations.
Installation
Reference should always be made to the ARGCO installation instructions of the product you are installing.
Warranty
Refer to the Warranty section of the current Price List or contact ARGCO for details.